Q.SAFE QUICK COUPLINGS

The **GOLD STANDARD** for Hydraulic Quick Couplings

manuli® HYDRAULICS

"Manuli Hydraulics is focused on achieving excellence in the design, manufacture, and supply of fluid conveyance solutions, components and associated equipment for high pressure hydraulics, industrial material conveyance, refrigeration and cooling applications."

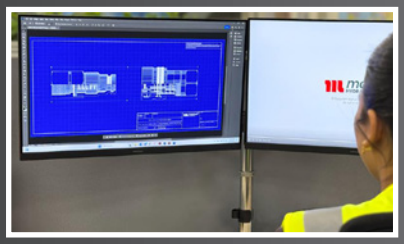

Our experienced Research & Development team take 2D drawings to 3D models to real life products.

Our world-class hoses, fittings and assembly equipment are manufactured in-house to the highest standards.

We test and validate our products to meet and exceed technical industry standards.

DESIGN → **MANUFACTURE** → **TEST** → **INTEGRATED SYSTEMS** → **SUPPLY**

We provide the complete solution: hoses, fittings, crimping parameters and assembly equipment for a fully integrated system.

We supply fluid conveyance solutions directly to our customers whenever and wherever they are.

From design to manufacture, and assembly, Manuli Hydraulics' continual commitment to this unified philosophy makes us a global leader in providing integrated solutions for fluid and material transfer connector applications including hydraulics, refrigeration & air conditioning, oil & gas, water and industrial low-pressure.

Manuli Hydraulics offer a complete range of hoses, fittings and assembly equipment which are purposely designed to work seamlessly together. This harmonized approach allows us to guarantee the quality and performance of our hose assemblies.

Every metre of hose and every single fitting is backed by industry knowledge and experience, made available to you through our dedicated team of application engineers.

From advice on component selection and configuration, our technical expertise allows us to support and work directly with our customers whenever and wherever they are based.

Disclaimer: We reserve the right to modify our products and/or related services and/or discontinue the manufacture and/or supply of any of the products and/or related services, without notice. This document supersedes all previous versions and previously issued documentation. The only official source of technical crimping parameters regarding our products is our Digital Crimp Tools. Printed copies are uncontrolled therefore, please be sure to use the latest versions of our Manuli Crimp App or Crimp Web Tool. Do not mix and match: always use Manuli original hoses and fittings. For more information, see our 'Safety Guide' by scanning the QR code.

DON'T MIX & MATCH

WHY QUICK COUPLINGS?

Modern hydraulic equipment is often designed to carry out multiple tasks with just a simple change of tooling. This trend is particularly prevalent in the agriculture and construction industries, where tractors, skid steer loaders, back hoes, telescopic handlers and excavators are typically equipped with auxiliary hydraulic lines to allow the attachment of any of a multitude of different tools.

In order to facilitate quick, safe and repeated connection a suitable coupling for the hydraulic feed and return lines must be used.

Some key requirements of these couplings are:

- High working pressure and safety factor.
- Minimal pressure drop across the coupling.
- Minimal oil spillage on connection / disconnection.
- Low connection / disconnection effort.
- Connection under pressure.

Q.SAFE FOR GENERAL HYDRAULIC APPLICATIONS

Q.Safe is the Manuli Hydraulic's offering for quick coupling applications. Composed of more than 1,200 references, accessories and spare parts, the Q.Safe brand has rapidly become an industry byword for quality and performance.

The majority of the Q.Safe product range is manufactured with an environmentally friendly Cr3+ (trivalent chrome) surface coating, which offers excellent resistance to corrosion; far exceeding ISO 4520 requirements (salt spray resistance: 240 hours for white corrosion and 400 for red corrosion). However, certain products which are expected to have a more severe mission profile now come with a Zinc Nickel (ZnNi) coating as standard - offering up to 3 times the corrosion resistance of the standard coating.

Guaranteeing leak-free performance, the Q.Safe brand is suitable for a wide range of different applications and assures total interchangeability with other quick coupling products on the market.

All Q.Safe products are manufactured and assembled in our world-class facility in Poland, where they are subjected to stringent quality controls including:

- ✓ **100% Visual Check**
- ✓ **100% Functional Test**
- ✓ **100% Air Sealing Test**

OUR QUICK COUPLING RANGE

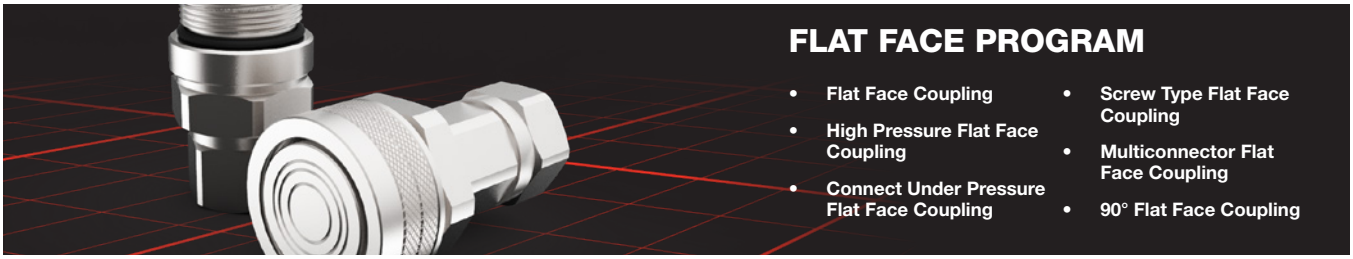

FLAT FACE PROGRAM

- Flat Face Coupling
- High Pressure Flat Face Coupling
- Connect Under Pressure Flat Face Coupling
- Screw Type Flat Face Coupling
- Multiconnector Flat Face Coupling
- 90° Flat Face Coupling

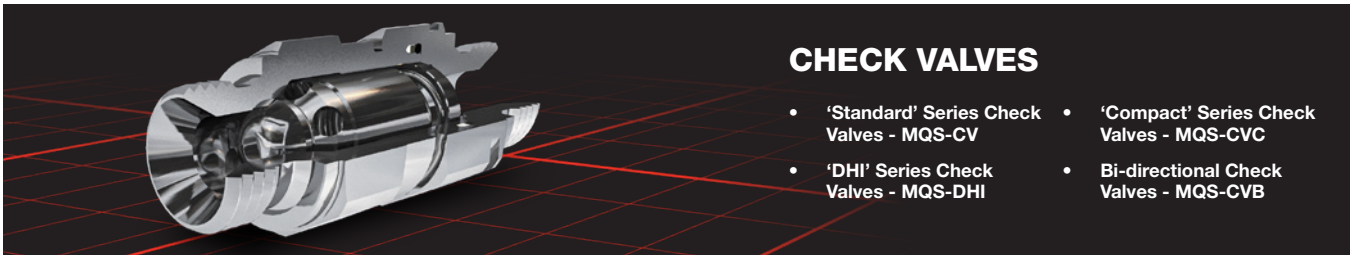

CHECK VALVES

- 'Standard' Series Check Valves - MQS-CV
- 'DHI' Series Check Valves - MQS-DHI
- 'Compact' Series Check Valves - MQS-CVC
- Bi-directional Check Valves - MQS-CVB

MQS-ARM / MQS-ARB

DIRECT TO HOSE INTEGRATION (DHI)

HIGH FREQUENCY IMPULSE RESISITANCE

APPLICATIONS

AGRICULTURE & FORESTRY

- MQS-A
- MQS-AB
- MQS-AF
- MQS-AFB
- MQS-AFM
- MQS-AFP
- MQS-AM
- MQS-AP
- MQS-ARB
- MQS-ARM
- MQS-B
- MQS-CV
- MQS-CVC
- MQS-D
- MQS-DHI
- MQS-F
- MQS-FH
- MQS-MC
- MQS-N
- MQS-NF
- MQS-VB
- MQS-VS

CONSTRUCTION

- MQS-A
- MQS-CV
- MQS-CVC
- MQS-D
- MQS-DHI
- MQS-F
- MQS-FH
- MQS-FP
- MQS-FS
- MQS-MC
- MQS-N
- MQS-SG
- MQS-SGR
- MQS-SH
- MQS-SO

INDUSTRIAL

- MQS-B
- MQS-CV
- MQS-CVC
- MQS-D
- MQS-DHI
- MQS-F
- MQS-FH
- MQS-FP
- MQS-FS
- MQS-MC
- MQS-N
- MQS-SC
- MQS-SH
- MQS-SO

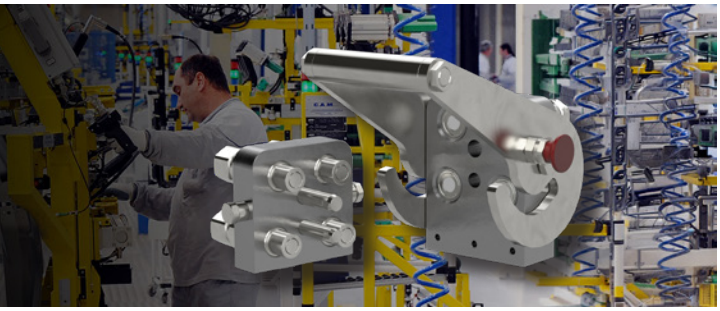

MINING

- MQS-FH
- MQS-MC

OIL & GAS

- MQS-BOP
- MQS-FS
- MQS-MC
- MQS-SO

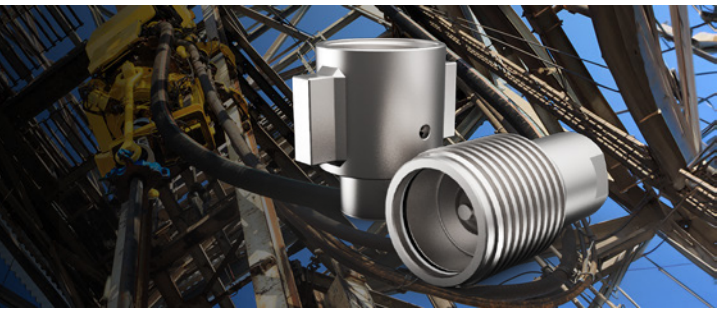

TRANSPORT

- MQS-D
- MQS-F
- MQS-FH
- MQS-FP
- MQS-MC
- MQS-SG
- MQS-SGR
- MQS-ST

Q.SAFE FLAT FACE PROGRAM

One of the cornerstones of the Manuli product range, the Q.Safe range of flat face quick couplings was developed with one clear goal in mind - to push the boundaries of what can be achieved by production model quick couplings. Thus, the Flat Face Program from Manuli was conceived.

The Q.Safe Flat Face program is comprised of four distinct flat valve models:

1. MQS-F - Flat Face Couplings
2. MQS-FH - High Pressure Flat Face Couplings
3. MQS-FP - Flat Face Coupling with Male Connectable under pressure
4. MQS-FS - Screw Type Flat Face Couplings

Each model has been designed to our uniquely high specifications, ensuring that it provides the best possible performance in whatever application it is used for.

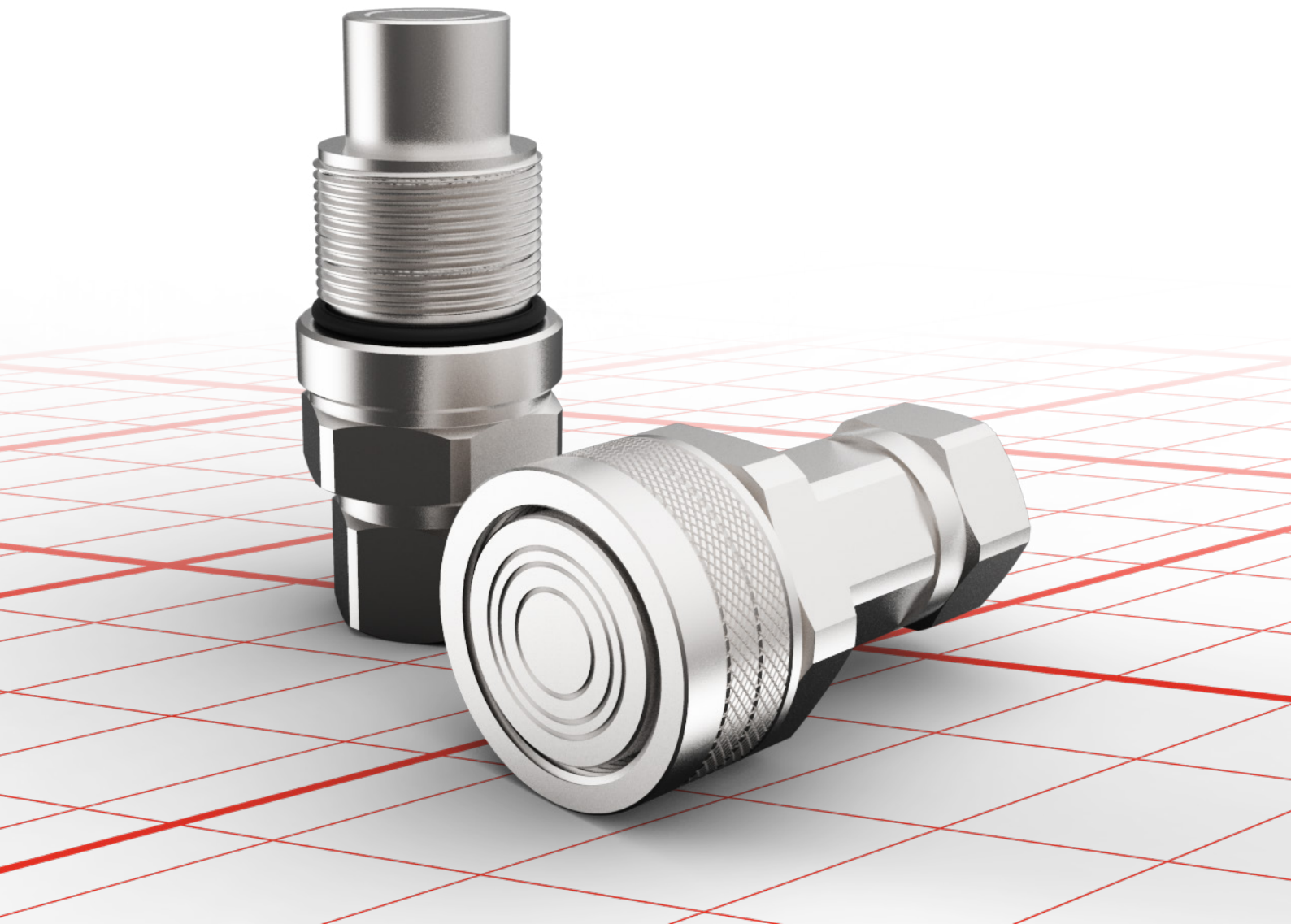

MQS-F: FLAT FACE COUPLINGS

The MQS-F flat face coupling sets a whole new standard for the quick release coupling industry.

With global interchangeability, high pressure ratings and the lowest pressure drop profile on the market, the MQS-F is a product that our competitors can only aspire to.

The MQS-F coupling provides the following benefits:

- **Streamlined Profile:** Provides market-leading pressure drop performance at high flow rates.
- **Environmentally Friendly:** Cr3+ (trivalent chrome) with 400+ hours to red rust under salt spray conditions.
- **Residual Pressure Connection:** Connectable with female under residual pressure up to 6 MPa.
- **High Working Pressure:** Up to 25 MPa (disconnected) and 35 MPa (connected) with a safety factor of 4:1 in all states.
- **Seal Design:** Moulded polyurethane (PU) seal on male coupling.
- **Oil Spillage:** Almost zero oil spillage during connection / disconnection.
- **Material Strength:** Made from highly resistant materials with selective tempering on most stressed areas.
- **Temperature Range:** -30°C to +110°C (-22°F to +230°F).
- **Interchangeability:** Globally interchangeable according to ISO 16028.
- **Endurance Testing:** Tested to 1,000,000 cycles at 120% of working pressure.
- **Oil Contamination:** No oil contamination during connection / disconnection.
- **Connection Effort:** Low connection / disconnection effort.

SIZE			WORKING PRESSURE (Connected Dynamic)		WORKING PRESSURE (Disconnected Dynamic)		RATED FLOW at 0.2 MPa of pressure drop		CONNECTION EFFORT		OIL SPILLAGE Connection/ Disconnection		MINIMUM BURST PRESSURE						CONNECTION/ DISCONNECTION UNDER PRESSURE
													Male		Female		M & F		
mm	inch	dash	MPa	PSI	MPA	PSI	l/min	US GPM	N	lb.	cc.	cubic inch	MPa	PSI	MPa	PSI	MPa	PSI	
6.3	1/4	04	35	5075	35	5075	15	4.0	130	29.2	0.005	0.0003	160	23200	140	20300	150	21750	Female only - up to 6 MPa
10	3/8	06	35	5075	25	3625	53	14.0	130	29.2	0.007	0.0004	140	20300	125	18125	145	21025	
12.5	1/2	08	35	5075	25	3625	98	25.9	140	31.5	0.008	0.0005	135	19575	115	16675	145	21025	Female only - up to 4 MPa
16	3/8	10	35	5075	25	3625	109	28.8	150	33.7	0.008	0.0005	150	21750	100	14500	140	20300	Female only - up to 3 MPa
19	3/4	12	35	5075	25	3625	174	46.0	210	47.2	0.009	0.0005	110	15950	102	15225	145	21025	Female only - up to 2 MPa
25	1	16	35	5075	21	3045	203	53.6	230	51.7	0.02	0.0012	100	14500	85	12325	150	21750	

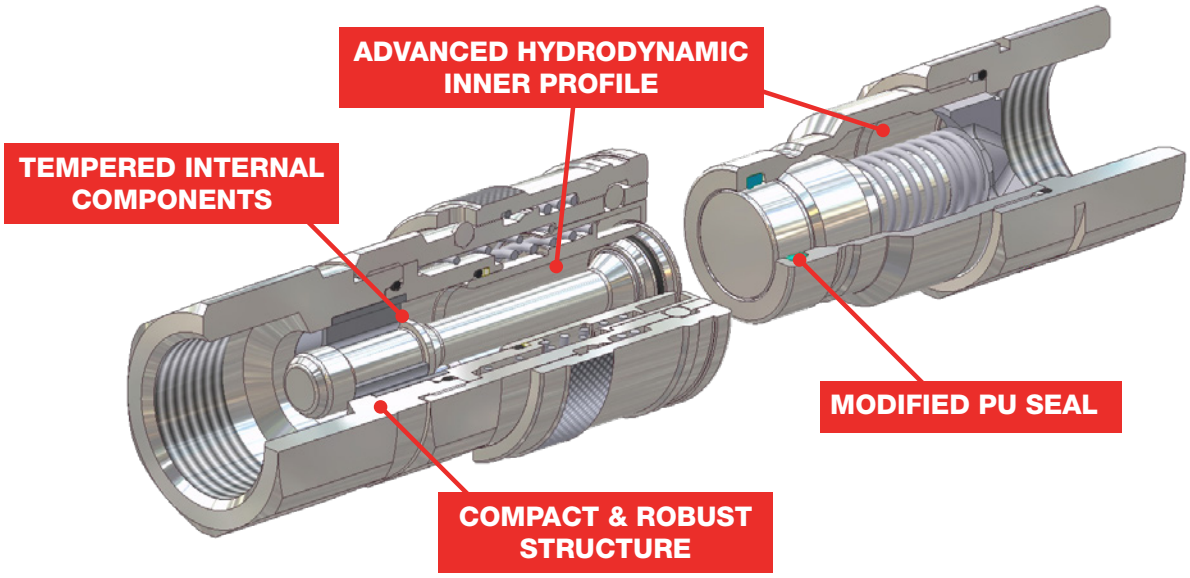

MQS-FH: HIGH PRESSURE FLAT FACE COUPLINGS

Designed for continuous service in high-pressure applications, the MQS-FH series couplings have an even more robust outer structure and higher resistance internal components.

In addition to the properties of the standard MQS-F series, the High-Pressure Flat Face series also has the following benefits:

- **Increased Service Life:** Increased service life in heavy-duty applications.
- **Corrosion Resistance:** Zinc Nickel coating for up to 3 times longer corrosion resistance.
- **Residual Pressure Connection:** Connectable with female under residual pressure up to 6 MPa.
- **Working pressure:** WP of 35 MPa in both connected and disconnected conditions.
- **Seal Design:** Enhanced polyurethane (PU) seal.
- **Construction:** More robust construction.
- **Energy Efficiency:** Improved energy efficiency.

SIZE			WORKING PRESSURE (Connected Dynamic)		WORKING PRESSURE (Disconnected Dynamic)		RATED FLOW at 0.2 MPa of pressure drop		CONNECTION EFFORT		OIL SPILLAGE Connection/ Disconnection		MINIMUM BURST PRESSURE						CONNECTION/ DISCONNECTION UNDER PRESSURE
													Male		Female		M & F		
mm	inch	dash	MPa	PSI	MPA	PSI	l/min	US GPM	N	lb.	cc.	cubic inch	MPa	PSI	MPa	PSI	MPa	PSI	
6.3	1/4"	04	35	5075	35	5075	13	3.4	120	27.0	0.005	0.0003	180	26100	150	21750	190	27550	Female only - up to 6 Mpa
10	3/8"	06	35	5075	35	5075	46	12.2	130	29.2	0.007	0.0004	170	24650	140	20300	170	24650	Female only - up to 6 Mpa
12.5	1/2"	08	35	5075	35	5075	82	21.7	150	33.7	0.008	0.0005	160	23200	150	21750	170	24650	Female only - up to 4 Mpa
16	5/8"	10	35	5075	35	5075	98	25.9	160	36.0	0.008	0.0005	170	24650	150	21750	170	24650	Female only - up to 3 Mpa
19	3/4"	12	35	5075	35	5075	150	39.6	210	47.2	0.009	0.0005	150	21750	150	21750	160	23200	Female only - up to 2 Mpa
25	1"	16	35	5075	35	5075	204	53.9	210	47.2	0.02	0.0012	160	23200	170	24650	160	23200	Female only - up to 2 Mpa

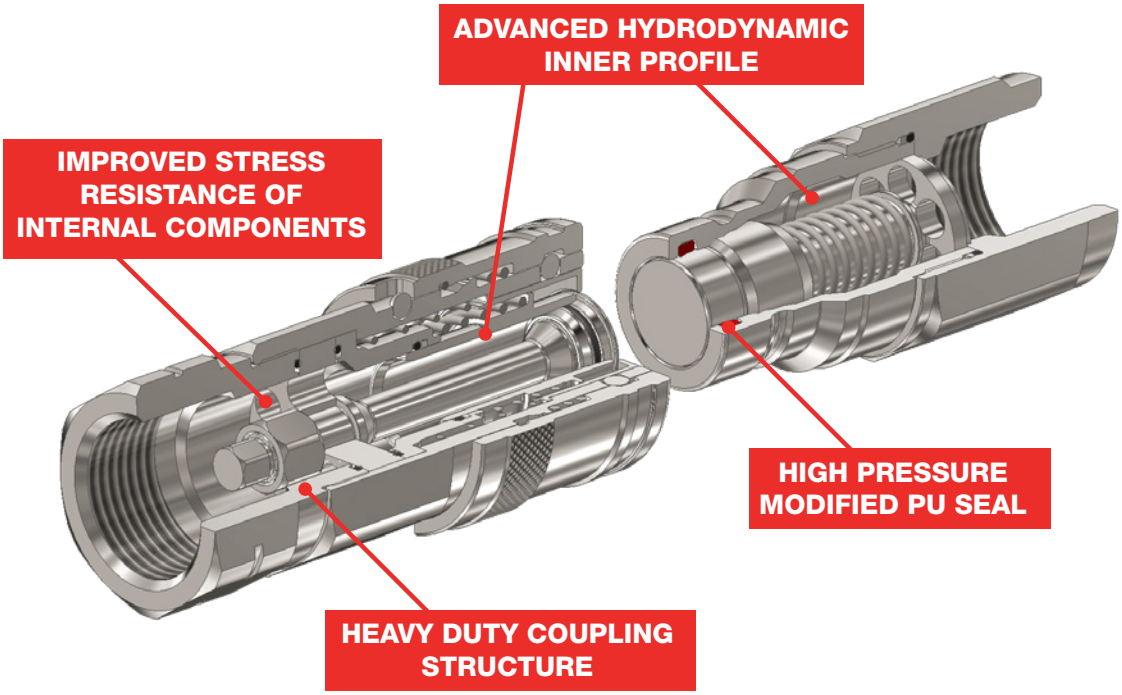

MQS-FP: CONNECT UNDER PRESSURE FLAT FACE COUPLING

Often used on earth-moving machine implements, the MQS-FP can be connected / disconnected with the male coupling under full working pressure. This is achieved by the addition of a micro valve with a mini polyurethane seal, creating a triple valve system.

In addition to the properties of the standard MQS-F series, the MQS-FP series also has the following benefits:

- **Connection:** Ability to be connected with the male coupling at full working pressure of 35 MPa (female must be at 0 MPa).
- **Corrosion Resistance:** Zinc Nickel plating for enhanced corrosion resistance.
- **Working Pressure:** WP of 35 MPa in both connected and disconnected conditions.
- **Connection Effort:** Low connection effort even when male coupling is pressurised.

SIZE			WORKING PRESSURE (Connected Dynamic)		WORKING PRESSURE (Disconnected Dynamic)		RATED FLOW at 0.2 MPa of pressure drop		CONNECTION EFFORT		OIL SPILLAGE Connection/ Disconnection		MINIMUM BURST PRESSURE				CONNECTION/ DISCONNECTION UNDER PRESSURE
													Male		M & F		
mm	inch	dash	MPa	PSI	MPA	PSI	l/min	US GPM	N	lb.	cc.	cubic inch	MPa	PSI	MPa	PSI	
10	3/8	06	35	5075	35	5075	56	14.8	150	33.7	0.007	0.0004	170	24650	140	20300	Connection allowed
12.5	1/2	08	35	5075	35	5075	85	22.5	180	40.5	0.008	0.0005	170	24650	140	20300	Connection allowed
16	5/8	10	35	5075	35	5075	99	26.2	200	45.0	0.008	0.0005	170	24650	140	20300	Connection allowed
19	3/4	12	35	5075	35	5075	131	34.6	200	45.0	0.009	0.0005	140	20300	150	21750	Connection allowed
25	1	16	35	5075	35	5075	170	44.9	220	49.5	0.02	0.0012	140	23200	160	23200	Connection allowed

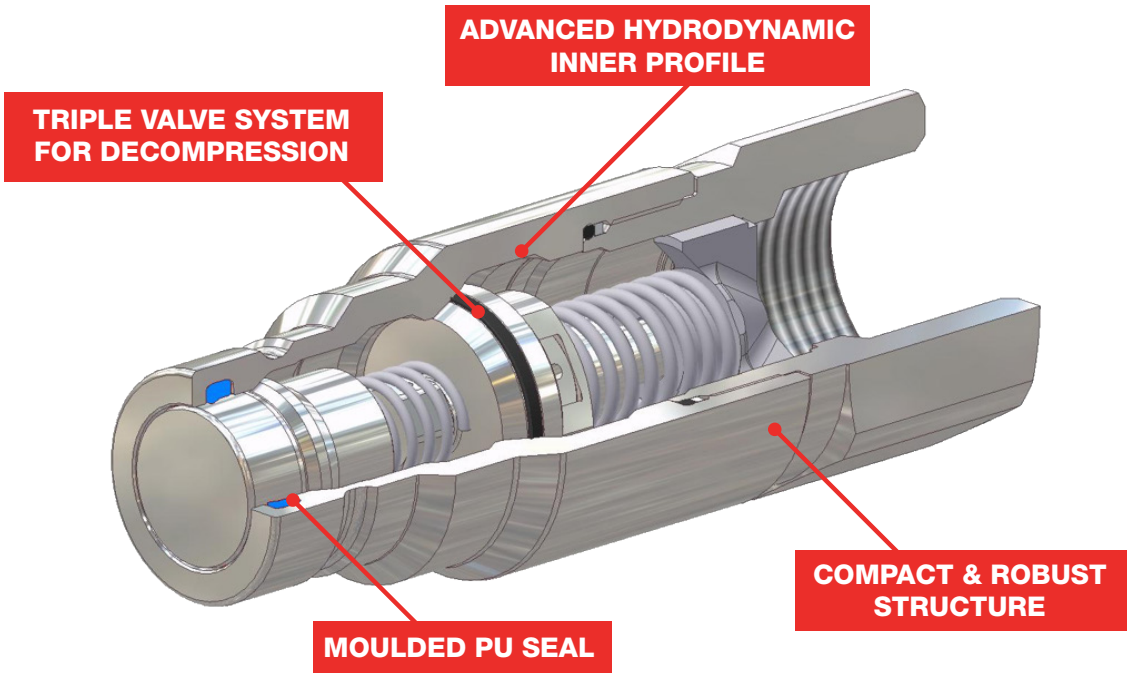

MQS-FS: SCREW TYPE FLAT FACE COUPLING

Incorporating the best design features of the rest of the flat face series, the MQS-FS is the quintessential coupling of its type. Ruggedly built, but sacrificing none of the hydrodynamic excellence inherent in the rest of the Q.Safe flat face range, the MQS-FS is the ultimate choice for even the most severe of applications,

In addition to the properties of the standard MQS-F series, the MQS-FS series also has the following benefits:

- **Pressure Resistance:** Ability to be connected with both couplings at full working pressure of 35 MPa.
- **Working Pressure:** Up to 42 MPa connected and up to 35 MPa disconnected.
- **Corrosion Resistance:** Zinc Nickel coating for corrosion resistance up to 720 hours.
- **Connection Effort:** Screw coupling for minimal connection effort even when system is pressurised.
- **Seal Design:** Enhanced polyurethane moulded seal.
- **Durability:** Extremely robust construction making it suitable for the toughest application.

SIZE			WORKING PRESSURE (Connected Dynamic)		WORKING PRESSURE (Disconnected Dynamic)		RATED FLOW at 0.2 MPa of pressure drop		TIGHTENING TORQUE	OIL SPILLAGE Connection/ Disconnection		MINIMUM BURST PRESSURE						CONNECTION/ DISCONNECTION UNDER PRESSURE
												Male		Female		M & F		
mm	inch	dash	MPa	PSI	MPA	PSI	l/min	US GPM	NM	cc.	cubic inch	MPa	PSI	MPa	PSI	MPa	PSI	
10	3/8"	06	42	6090	35	5075	40	10.6	60	0.007	0.0004	190	27550	145	21025	175	25375	Allowed
12.5	1/2"	08	42	6090	35	5075	69	18.2	100	0.008	0.0005	180	26100	145	21025	170	24650	Allowed
16	5/8"	10	42	6090	35	5075	86	22.7	100	0.008	0.0005	200	29000	145	21025	185	26825	Allowed
19	3/4"	12	42	6090	35	5075	124	32.8	150	0.009	0.0005	145	21025	145	21025	175	25375	Allowed
25	1"	16	42	6090	35	5075	165	43.6	200	0.02	0.0012	145	21025	155	22475	170	24650	Allowed
38	1-1/2"	24	38	5510	32	4640	396	104.6	400	0.05	0.0031	130	18850	155	22475	155	22475	Allowed
51	2"	32	38	5510	32	4640	720	190.2	500	0.4	0.0244	130	18850	130	18850	160	23200	Allowed

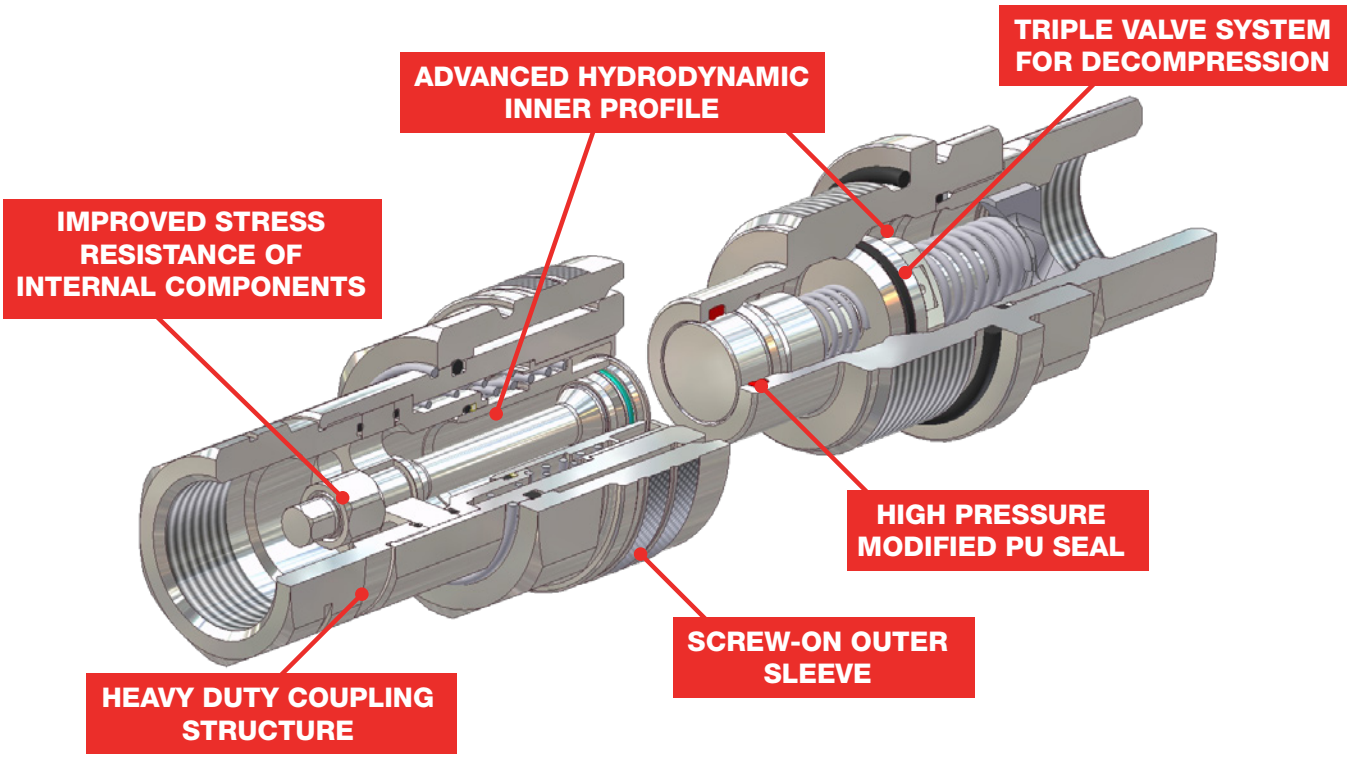

FLAT FACE MULTICONNECTORS

The Q.Safe quick coupling range is widely renowned for representing the Gold Standard in quick coupling quality and performance. The introduction of the Q.Safe Flat Face Multiconnector range combines this superior performance with the added efficiency and safety related benefits of a multiconnector block system.

The multiconnector series also has the following benefits:

- **Connection Efficiency:** Reduces connection time when multiple connectors are used.
- **Safety:** No risk of incorrect connection.
- **Alignment:** No misalignment between mobile and static blocks.
- **Design Compactness:** Compact design for minimal added weight.
- **Performance:** Flat face couplings allow high pressures (350 bar) and high flow rates.
- **Simplicity:** Allows hoses to be arranged closer together whilst still allowing easy access.
- **Peformance:** Industry leading performance with reduced pressure drop.
- **Wastage** Almost zero (between 0.007 cc and 0.009 cc) oil spillage on connection / disconnection.
- **Residual Pressure Connection:** Connection under residual pressure.
- **Maintenance:** Easy to clean.

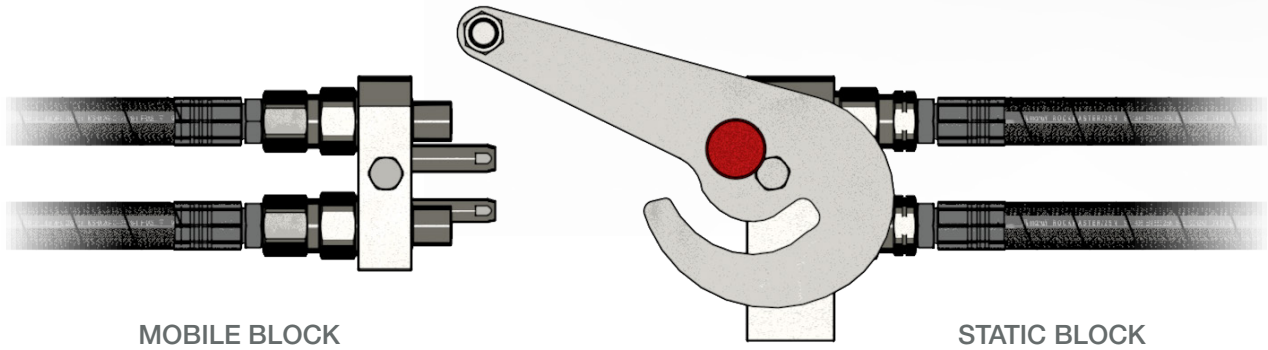

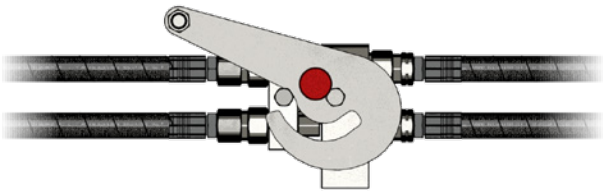

Simply position the mobile block so that the couplings sit against the face of the static block. The extended pins will slide into the mating holes to ensure perfect alignment.

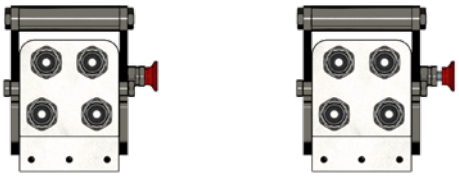

Pull out the red locking pin to allow the handle to move.

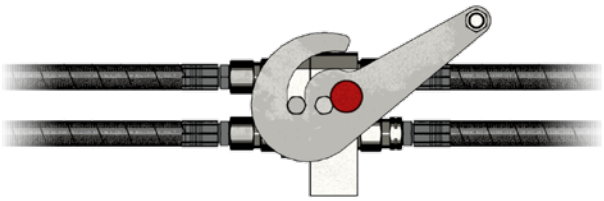

Move the handle in the direction shown to pull the mobile block towards the static block, making the connection with the couplings.

The red pin will pop back in when the connection is complete, effectively locking the two parts together.

MQS-F 90°: FLAT FACE QUICK COUPLINGS

Finding the optimum position for quick couplings on vehicles can be tricky, especially on equipment that uses multiple tools, such a skid steers. Sometimes the hose routing necessary for a particular implement just doesn't allow for a standard straight quick coupling. In these cases, it is often necessary to change the orientation of the hose connection to the coupling.

Q.Safe Flat Face 90° quick couplings from Manuli Hydraulics are the perfect solution for this type of situation, as well as for those where space is restricted and a straight coupling just won't fit.

With any 90° quick coupling, the re-orientation of the ports causes a certain amount of internal turbulence which increases pressure drop across the coupling. Designed to the same exacting standards as the MQS-F quick coupling series, the 90° version suffers from minimal additional pressure drop ensuring that it is still one of the most efficient couplings of its type.

Available in sizes 3/8" and 1/2", Q.Safe 90° quick couplings are designed in accordance with ISO 16028 making them fully interchangeable with other flat face coupling brands.

SIZE			WORKING PRESSURE (Connected Dynamic)		WORKING PRESSURE (Disconnected Dynamic)		RATED FLOW at 0.2 MPa of pressure drop		CONNECTION EFFORT		OIL SPILLAGE Connection/ Disconnection		MINIMUM BURST PRESSURE						CONNECTION/ DISCONNECTION UNDER PRESSURE
													Male		Female		M & F		
mm	inch	dash	MPa	PSI	MPA	PSI	l/min	US GPM	N	lb.	cc.	cubic inch	MPa	PSI	MPa	PSI	MPa	PSI	
10	3/8	06	35	5075	25	3625	53	14.0	130	29.2	0.007	0.0004	140	20300	125	18125	145	21025	Female only - up to 6 MPa
12.5	1/2	08	35	5075	25	3625	98	25.9	140	31.5	0.008	0.0005	135	19575	115	16675	145	21025	Female only - up to 4 MPa

MQS-ARM & MQS-ARB

The MQS-ARM and MQS-ARB are amongst the most advanced non-flat face couplings on the market. Compatible with all standard ISO A male couplings, these products are designed especially for rigid mounting on agricultural vehicles.

The MQS-ARM coupling provides the following benefits:

- **Safety Factor:** 4:1 for dynamic pressures.
- **Working Pressure:** Up to 30 MPa.
- **Residual Pressure Connection:** Connectable with male coupling under pressure.
- **Connection Type:** Push-pull connection and disconnection.
- **Automatic Disconnection:** Breakaway function according to ISO 5675.
- **Endurance Testing:** Tested to 500,000 cycles at 120% of working pressure.

The MQS-ARB coupling also provides the following additional benefit:

- **Connection under full pressure:** Connectable with both couplings under pressure

SIZE			WORKING PRESSURE (Connected Dynamic)		RATED FLOW at 0.2 MPa of pressure drop			CONNECTION EFFORT		OIL SPILLAGE Connection/ Disconnection		MINIMUM BURST PRESSURE				CONNECTION/ DISCONNECTION UNDER PRESSURE
												Female		M & F		
mm	inch	dash	MPa	PSI	Flow Direction	l/min	US GPM	N	lb.	cc.	cubic inch	MPa	PSI	MPa	PSI	
12.5	1/2	08	30	4350	F > M	80	21.1	230	52	2	0.122	125	18125	125	18125	Connection only, with male under pressure
					M > F	68	18.0									

MQS-ARM Technical Data

12.5	1/2	08	30	4350	F > M	80	21.1	230	511	2.5	0.153	125	18125	125	18125	Connection only, with male and female under pressure
					M > F	68	18.0			With 0 MPa of pressire						

MQS-ARB Technical Data

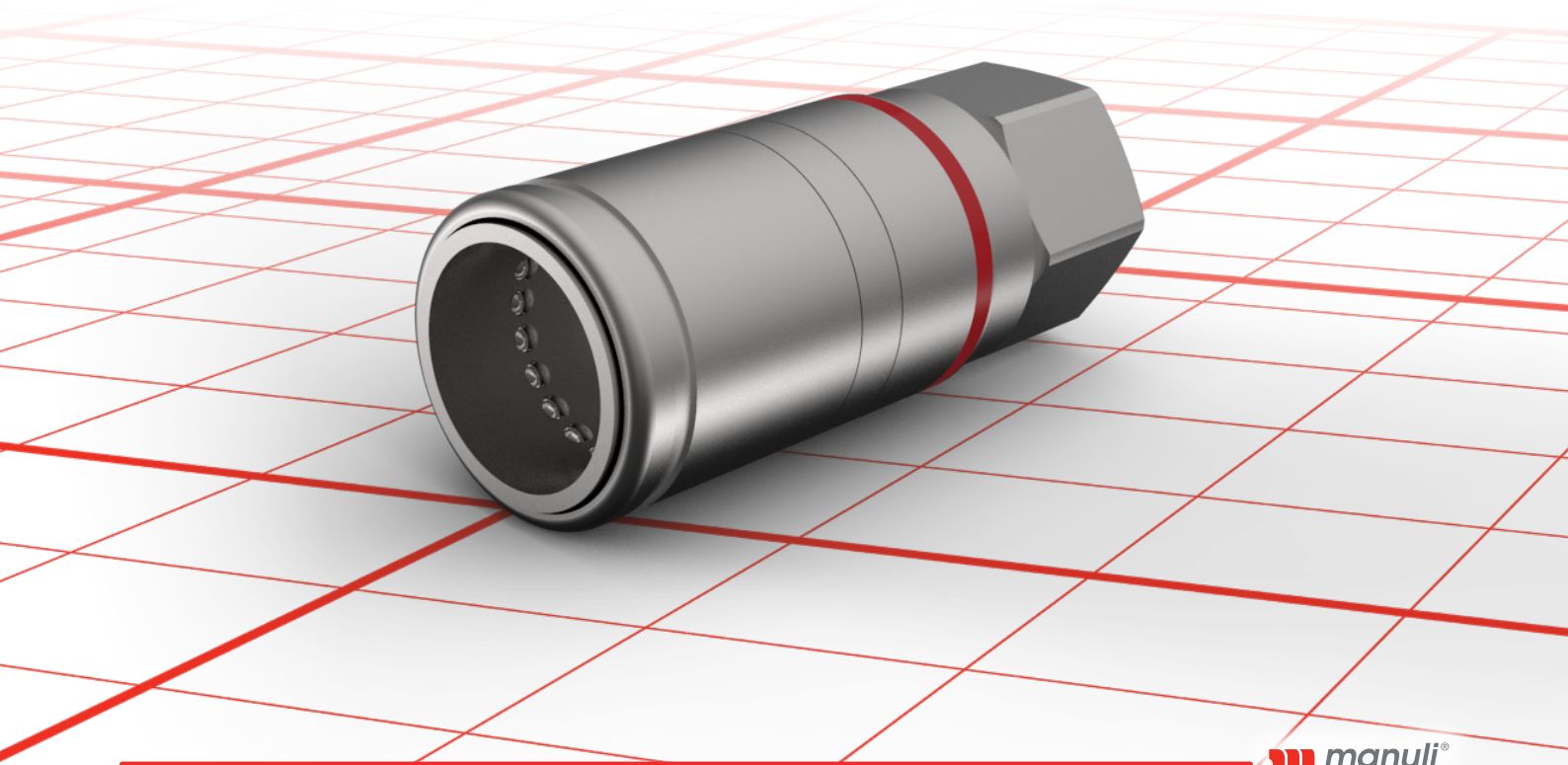

DIRECT TO HOSE INTEGRATION (DHI)

The Q.Safe DHI program from Manuli Hydraulics is an innovative system allowing the quick coupling to be assembled directly to the hose. Assembly of the quick coupling directly to the hose provides a number of important benefits over the more typical adaptor style fittings.

The benefits from the DHI program are as follows:

- **Efficiency:** Fewer components in the hose assembly reduces the cost of assembly operations and parts.
- **Leak Prevention:** Reduced number of components also minimises the number of potential leak points.
- **Safety:** Reduced risk of assembly operation mistakes.
- **Simplicity:** Easier maintenance and replacement operations.
- **Cost Effective:** Quick coupling maintenance is possible without the need to replace the hose.
- **Field Reliability:** Eliminates unscrewing problems in the field.
- **Compatibility:** DHI solutions are available for ISO A, ISO B and flat face series.

SIZE			WORKING PRESSURE (Connected Dynamic)		RATED FLOW at 0.2 MPa of pressure drop		CONNECTION EFFORT		OIL SPILLAGE Connection/ Disconnection		MINIMUM BURST PRESSURE						CONNECTION/ DISCONNECTION UNDER PRESSURE
											Male		Female		M & F		
mm	inch	dash	MPa	PSI	l/min	US GPM	N	lb.	cc.	cubic inch	MPa	PSI	MPa	PSI	MPa	PSI	
12.5	1/2	08	30	4350	75	19.8	80	18.0	1.8	0.110	125	18125	150	21750	150	21750	Not allowed

DHI ISO A Technical Data

12.5	1/2	08	30	4350	68	18.0	110	244	2	0.122	-	-	140	20300	140	20300	Not allowed

DHI ISO A Push-Pull Technical Data

6.3	1/4	04	40	5800	16	4.3	40	9.0	0.8	0.049	180	26100	190	27550	165	23925	Not allowed
10	3/8	06	35	5075	51	13.5	40	9.0	1.5	0.092	145	21025	160	23200	160	23200	Not allowed
12.5	1/2	08	35	5075	84	22.0	70	15.7	2.5	0.153	145	21025	145	21025	160	23200	Not allowed

DHI ISO B Technical Data

10	3/8	06	25	3625	53	14.0	130	29.2	0.007	0.0004	140	20300	125	18125	145	21025	Not allowed
12.5	1/2	08	25	3625	98	25.9	140	31.5	0.008	0.0005	135	19575	115	16675	145	21025	Not allowed

DHI Flat Face Technical Data

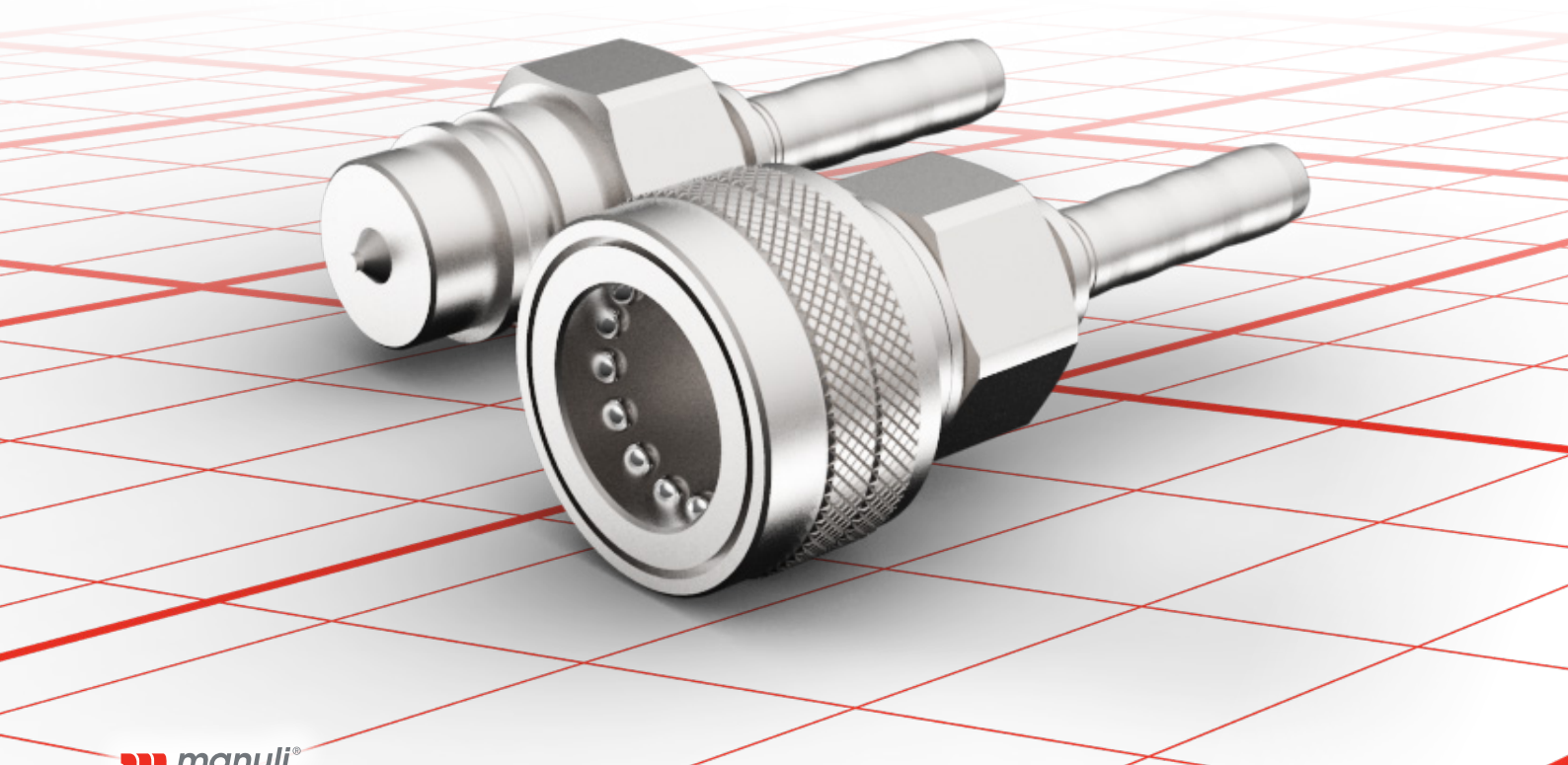

MQS-FEH: HIGH FREQUENCY IMPULSE RESISTANCE

Designed to withstand extreme levels of high frequency impulses at very high pressures, the new MQS-FEH extra heavy-duty quick coupling uses a new and unique (pat. pending) locking system. This system ensures that in even the most severe high-frequency impulse conditions, the MQS-FEH coupling will provide a long lasting, secure and leak-free seal. This is made possible by the innovative and unique design of the couplings, where potential failure modes previously accepted as inevitable, have been addressed, solved and eradicated. MQS-FEH is therefore ideal for a variety of demanding equipment, tools and applications such as:

- Hydraulic hammers
- Stone crushers and screeners
- Demolition equipment
- Vibratory compactors and road rollers
- Asphalt milling equipment
- Pile driving equipment
- Hard rocks drilling equipment
- General off-highway equipment subject to high levels of vibrations

SIZE			WORKING PRESSURE (Connected Dynamic)		WORKING PRESSURE (Disconnected Dynamic)		RATED FLOW at 0.2 MPa of pressure drop		CONNECTION EFFORT		OIL SPILLAGE Connection/ Disconnection		MINIMUM BURST PRESSURE						CONNECTION/ DISCONNECTION UNDER PRESSURE
													Male		Female		M & F		
mm	inch	dash	MPa	PSI	MPA	PSI	l/min	US GPM	N	lb.	cc.	cubic inch	MPa	PSI	MPa	PSI	MPa	PSI	
12.5	1/2"	08	35	5,075	35	5,075	85	22.5	180	40.5	0.008	0.0005	170	24,650	150	21,750	180	26,100	Allowed up to 4 MPa
16	5/8"	10	35	5,075	35	5,075	105	27.7	200	45.0	0.008	0.0005	170	24,650	150	21,750	180	26,100	Allowed up to 3 MPa
19	3/4	-12	35	5,075	35	5,075	160	42.3	240	54.0	0.009	0.0005	170	24,650	140	20,300	170	24,650	Allowed up to 2 MPa
25	1	-16	35	5,075	35	5,075	235	62.1	270	60.7	0.02	0.0012	160	23,200	180	26,100	170	24,650	Allowed up to 2 MPa

CHECK VALVES

Manuli Hydraulics' check valves are expertly designed for optimal hydrodynamic performance, ensuring minimal pressure drop across the component, and therefore minimising the impact on the fluid flow in your systems. Manufactured from high quality steel with a Cr3+ (trivalent chrome) plating, Manuli check valves offer superior corrosion resistance - up to 500 hours to red rust in salt spray conditions - with the option to upgrade to a zinc-nickel coating (720 hours to red rust) on request.

Valve sealing is supplied by a C98 high-carbon steel spring and (where required) a nitrile (NBR) O-ring and back-up ring arrangement, which prevents unwanted creeping of the rubber seal over time.

Manuli check valve housings come in three basic forms, "Standard", "DHI" and "Compact". This choice of housing design makes it even easier for you to include Manuli check valves into your systems regardless of space constraints.

The Manuli check valve range also includes "Bi-Directional" options for both the "Standard" and "DHI" housing types, to allow an even greater level of pressure control in your systems.

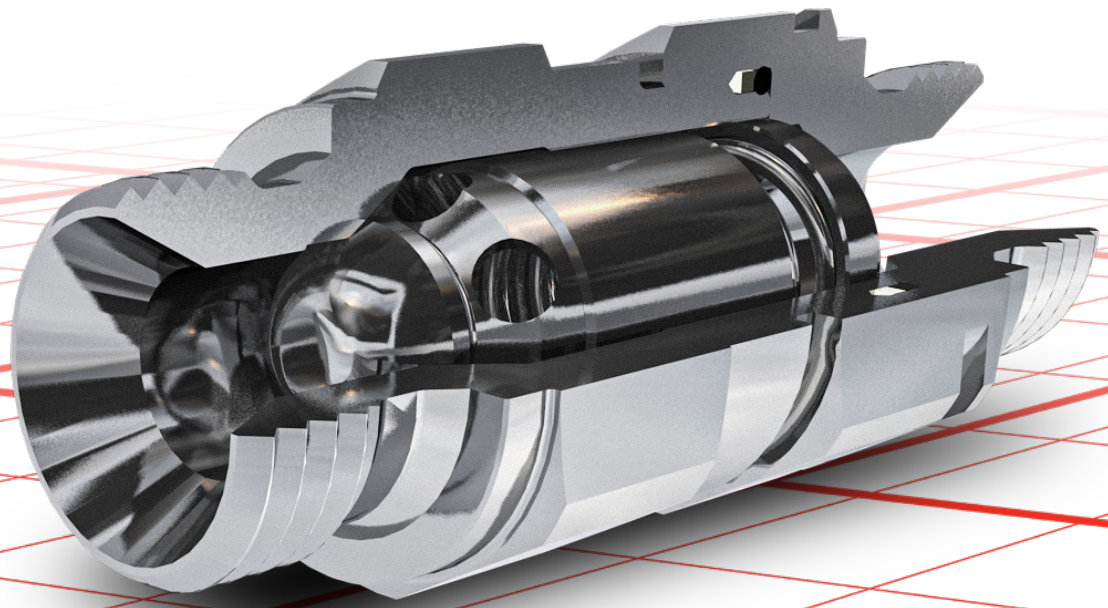

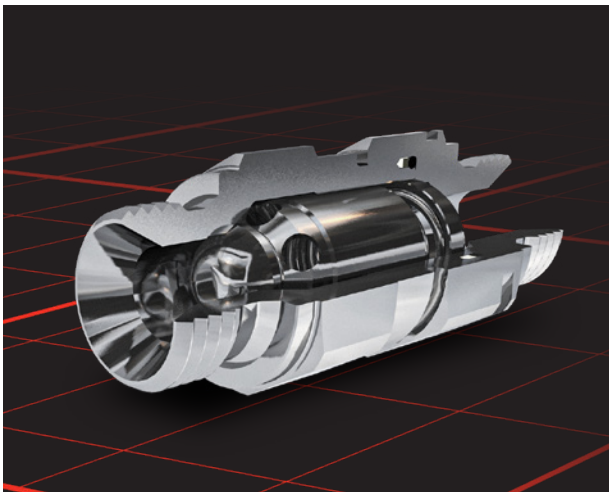

MQS-CV: STANDARD CHECK VALVES

The Standard Series check valves from Manuli Hydraulics are designed to be the "go-to" check valve range for hydraulic system design.

Made from high-quality materials and with a robust design, the MQS-CV range of check valves covers all of the most requested configurations in a wide range of pressure settings.

Available in sizes from ¼" to 2", the MQS-CV range comprises nearly 700 individual references, to ensure that you have the ability to choose an off-the-shelf valve for most hydraulic system applications, regardless of size and pressure requirements.

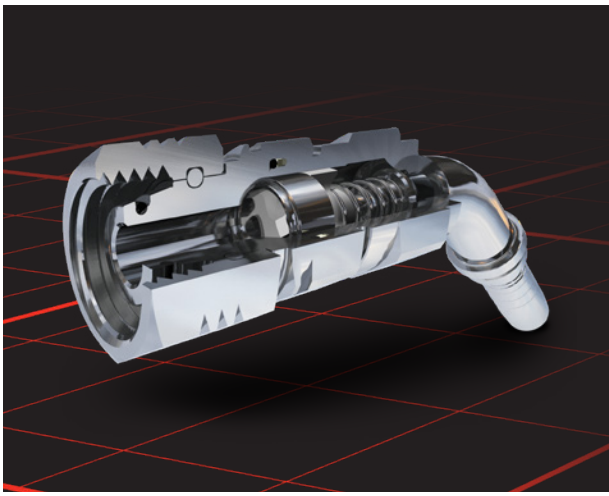

MQS-DHI: DHI CHECK VALVES

Unique to the Manuli Hydraulics portfolio, the DHI Series check valves bring several important advantages to the table.

First and foremost, the DHI Series integrates directly to the hose instead of a traditional fitting and termination end. This saves both time and money by eliminating the need to stock and fit separate components.

By replacing the typical hydraulic fitting, use of the DHI Series also reduces the number of potential leak points throughout your system, while also minimising the potential for incorrect assembly due to the check valve being installed backwards.

Another advantage is the reduction in space taken up by the check valve arrangement due to the elimination of the need for a termination end.

The MQS-DHI series is available with Multifit, Interlock Plus and Spiralfit tail options for seamless integration with Manuli hoses and ferrules.

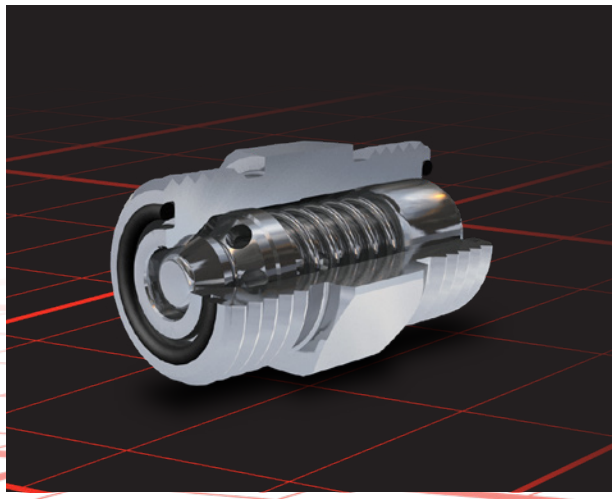

MQS-CVC: COMPACT CHECK VALVES

Designed with both space saving and ease of maintenance in mind, the Compact Series of check valves prove that good things come in small packages.

Boasting all the technical benefits of the MQS-CV range, the Compact Series valves take up as little as 50% of the room that their larger cousins occupy. This space saving, coupled with the associated weight reduction, makes the MQS-CVC Series perfect for those situations where available space is at a premium and every additional kilogram must be justified.

The single-piece outer body of the MQS-CVC Series also eliminates the need for internal threads and seals, thereby minimising potential leak points.

Available in both even and uneven male-male configurations, the MQS-CVC Series can also be used in place of a step-up / step-down adaptor, thereby reducing the number of individual components required in your systems.

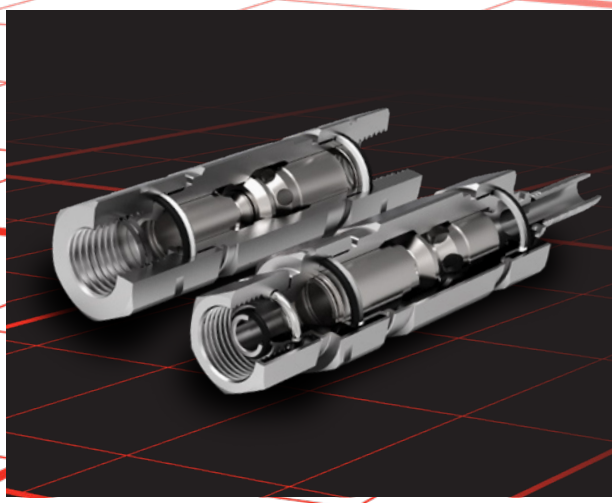

MQS-CVB: BI-DIRECTIONAL CHECK VALVES

Often required in hydraulics systems as a safety device or where it is necessary to build up some pressure before feeding an actuator, bi-directional check valves operate with two independently set crack pressures.

Instead of having an "INLET" and an "OUTLET" port, bi-directional check valves have "A" and "B" ports, allowing you to specify the crack pressure in each direction. Manuli bi-directional check valves have a standard crack pressure of 35 kPa in the B-A direction, and the A-B direction crack pressure can be specified as either 500 kPa or 800 kPa.

Available in both Standard and DHI configurations, the Manuli bi-directional check valves range offers an extra level of flexibility to your system design options.

Q.SAFE PRODUCT RANGE

QUICK COUPLINGS SERIES	DESCRIPTION	FEMALE	MALE	SHUT-OFF SYSTEM	SPECIFICATIONS	CONNECTION	SIZE									
							1/8”	1/4”	3/8”	1/2”	5/8”	3/4”	1”	1¼”	1½”	2”
MQS-A	ISO A	Q008	Q002	Poppet Valve	ISO 7241 series A	Locking Balls		■	■	■		■	■	■	■	■
			Q004	Shielded Poppet						■						
		Q009	Q003	Ball Valve						■						
MQS-AP	ISO A connectable under pressure	Q010	Q006	Poppet Valve	ISO 7241 series A	Locking Balls				■		■				
MQS-AM	ISO A connectable with male under pressure	Q011	-	Poppet Valve	ISO 7241 series A	Locking Balls				■						
MQS-AB	ISO A connectable with both parts under pressure	Q012	-	Poppet Valve	ISO 7241 series A	Locking Balls				■						
MQS-B	ISO B	Q024	Q021	Poppet Valve	ISO 7241 series B	Locking Balls	■	■	■	■		■	■			
MQS-BOP	ISO B for drilling BOP unit	Q026 F	Q021 F	Poppet Valve	ISO 7241 series B + flame test res. to API 16D	Locking Balls				■		■	■			
MQS-N	Standard	Q032	Q029	Poppet Valve	-	Locking Balls		■	■			■	■	■	■	
		Q033	Q030	Ball Valve				■	■			■	■			
MQS-NL	Free-flow	Q038	Q037	Without	-	Locking Balls		■	■	■						
MQS-NF	Standard push-pull	Q036	-	Poppet Valve	-	Locking Balls		■	■							
MQS-AF	Push-pull	Q013	-	Poppet Valve	ISO 7421 series A	Locking Balls		■	■	■		■	■			
MQS-AFP	Push-pull connectable under pressure	Q015	-	Poppet Valve	ISO 7421 series A	Locking Balls				■						
MQS-AFM	Push-pull, connectable with male under pressure, flexible mouting	Q016	-	Poppet Valve	ISO 7421 series A	Locking Balls				■						
MQS-AFB	Push-pull connectable wtih male under pressure, flexible mounting	Q017	-	Poppet Valve	ISO 7421 series A	Locking Balls				■						
MQS-ARM	Push-pull, connectable with male under pressure, rigid mounting	Q018	-	Poppet Valve	ISO 7421 series A	Locking Balls				■						
MQS-ARB	Push-pull connectable with both parts under pressure, rigid mounting	Q019	-	Poppet Valve	ISO 7421 series A	Locking Balls				■						
MQS-VB	Braking circuit valve	Q048	Q047	Flat Valve	ISO 5676	Locking Balls				■						
MQS-VS	Agricultural valve	Q050	Q049	Flat Valve	-	Screw-on Sleeve				■						

QUICK COUPLINGS SERIES	DESCRIPTION	FEMALE	MALE	SHUT-OFF SYSTEM	SPECIFICATIONS	CONNECTION	SIZE									
							1/8”	1/4”	3/8”	1/2”	5/8”	3/4”	1”	1¼”	1½”	2”
MQS-D	Diagnostic	-	Q045	Flat Valve	ISO 15171-1	Locking Balls	■									
MQS-F	Flat-face	Q041	Q039	Flat Valve	ISO 16028 e HTMA (only 3/8” size)	Locking Balls		■	■	■	■	■	■			
MQS-FH	Flat-face high pressure	Q044	Q043	Flat Valve	ISO 16028 e HTMA (only 3/8" size)	Locking Balls		■	■	■	■	■	■			
MQS-FEH	Flat-face extra heavy duty	Q078	Q074	Flat Valve	-	Retaining Ring				■	■	■	■			
MQS-FP	Flat-face connectable under pressure	-	Q040	Flat Valve	ISO 16028 e HTMA (only 3/8” size)	Locking Balls			■	■	■	■	■			
MQS-FS	Flat-face screw type	Q067	Q066	Flat Valve	Manuli standards	Screw-on Sleeve			■	■	■	■	■		■	■
MQS-SG	Screw	Q052	Q051	Poppet Valve	German Market inter-changeable ISO 14541 (from 3/8" to 3/4")	Screw-on Sleeve		■	■	■		■	■			
MQS-SGR	Screw heavy duty	Q062	Q061	Poppet Valve	German Market inter-changeable ISO 14541 (from 3/8" to 3/4")	Screw-on Sleeve			■	■		■	■		■	
MQS-SH	Screw heavy duty	Q054	Q053	Poppet Valve	French Market inter-changeable	Screw-on Sleeve		■	■	■		■	■	■	■	
MQS-SC	Screw hydraulic cylinders	Q056	Q055	Poppet Valve & Ball Valve	ISO 14540	Screw-on Sleeve		■	■							
MQS-SO	Screw for oil & gas	Q077	Q076	Poppet Valve	-	Screw-on Sleeve						■	■	■	■	■
MQS-ST	Screw for truck	Q058	Q057	Poppet Valve	-	Screw-on Sleeve						■	■			
MQS-A DHI	ISO A	Q308	Q302	Poppet Valve	ISO 7241 series A	Locking Balls				■						
MQS-AF DHI	ISO A push-pull	Q313	-	Poppet Valve	ISO 7241 series A	Locking Balls				■						
MQS-B DHI	ISO B	Q324	Q321	Poppet Valve	ISO 7241 series B	Locking Balls		■	■	■						
MQS-F DHI	Flat-face	Q341	Q339	Flat-face	ISO 16028 & HTMA (Only 3/8” size)	Locking Balls			■	■						

manuli® HYDRAULICS

www.manuli-hydraulics.com

© 2025 Manuli Ryco group. All rights, including trademarks, reserved. | 10-2026 | V3-0